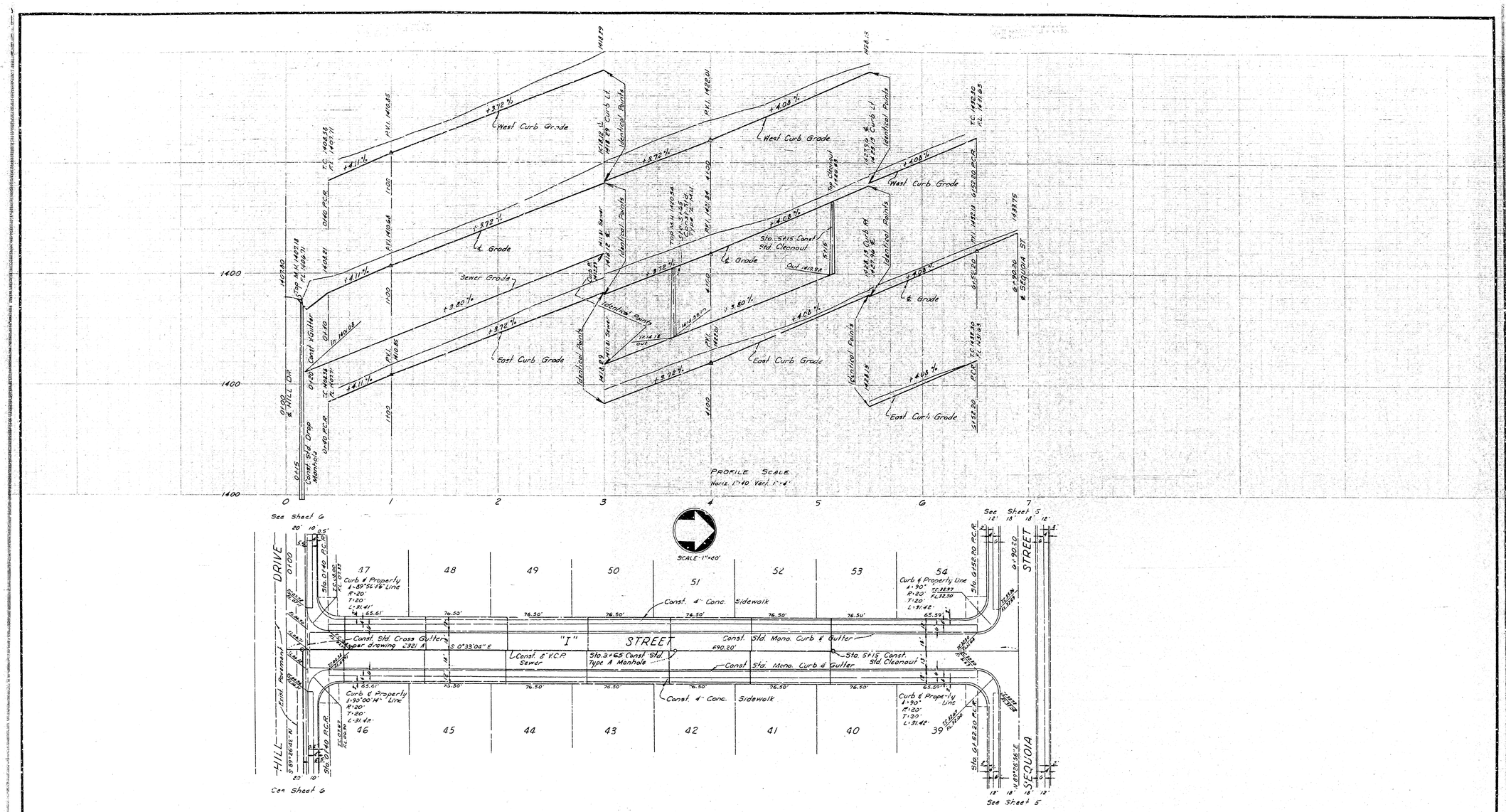

Don B. Miller
Don B. Miller R.E. 8750

DEPARTMENT OF ENGINEERING
CITY OF SAN BERNARDINO

IMPROVEMENT PLANS
TRACT 6064

SUBMITTED BY CAMPBELL & MILLER	REFERENCE	DRAWING	
APPROVED February 18, 1960	DRAWN BY	2742	
Conrad E. Wolfard CITY ENGINEER	CHECKED	SHEET 4 OF 6	
REGISTERED CIVIL ENGINEER NO 9879			

6-2-26

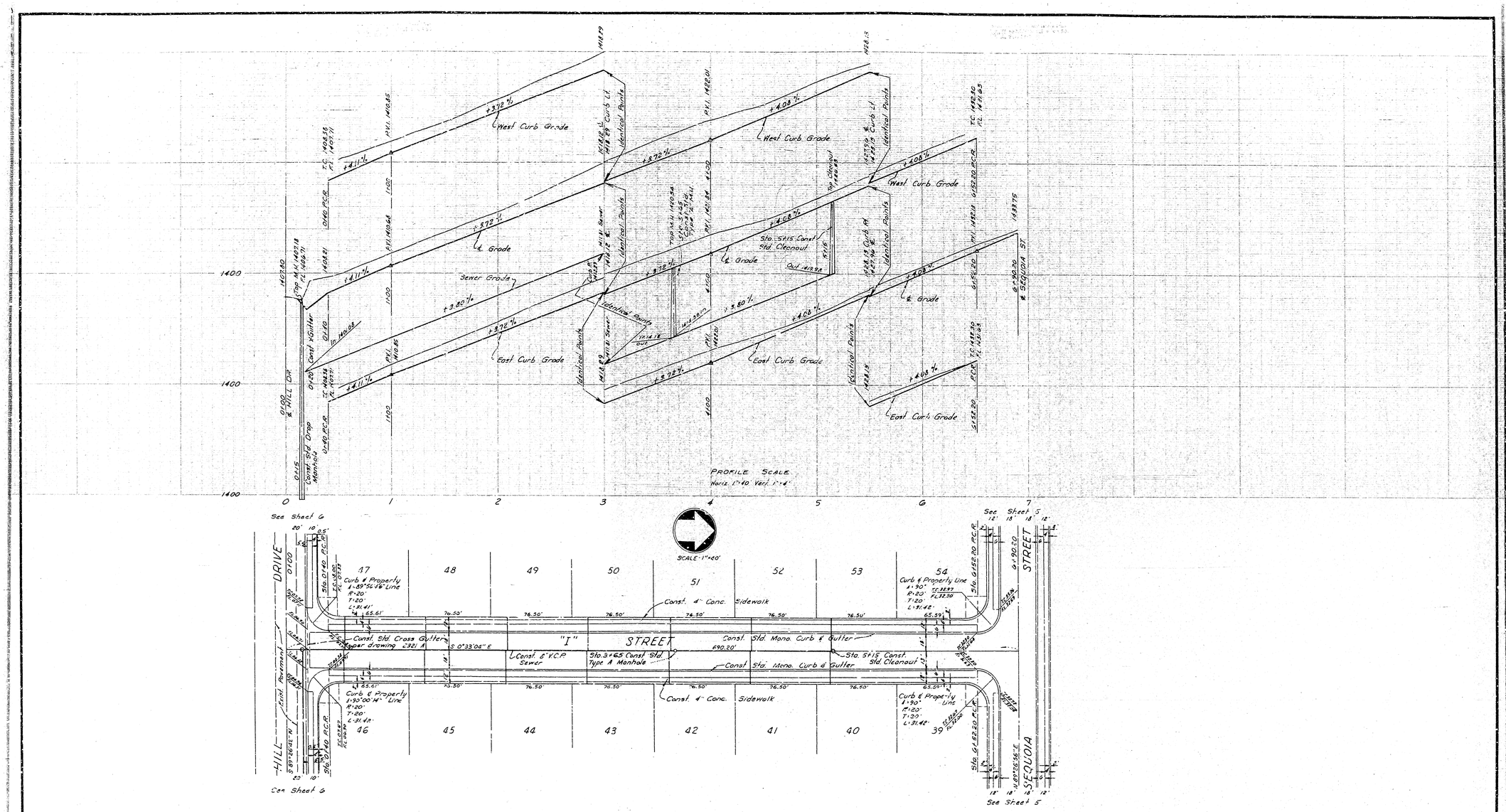

Don B. Miller
Don B. Miller R.E. 8750

DEPARTMENT OF ENGINEERING
CITY OF SAN BERNARDINO

IMPROVEMENT PLANS
TRACT 6064

SUBMITTED BY CAMPBELL & MILLER	REFERENCE	DRAWING	
APPROVED February 18, 1960	DRAWN BY	2742	
Conrad E. Wolfard CITY ENGINEER	CHECKED	SHEET 4 OF 6	
REGISTERED CIVIL ENGINEER NO 9879			

6-2-26